DELTA ELECTRONICS, INC.

www.delta.com.tw/industrialautomation

IABU Headquarters
Delta Electronics, Inc.
Taoyuan1
31-1, Xingbang Road, Guishan Industrial Zone,
Taoyuan County 33370, Taiwan, R.O.C.
TEL: 886-3-362-6301 / FAX: 886-3-362-7267

Asia
Delta Electronics (Jiang Su) Ltd.
Wujiang Plant3
1688 Jiangxing East Road,
Wujiang Economy Development Zone,
Wujiang City, Jiang Su Province,
People's Republic of China (Post code: 215200)
TEL: 86-512-6340-3008 / FAX: 86-512-6340-7290

Delta Greentech (China) Co., Ltd.
238 Min-Xia Road, Cao-Lu Industry Zone,Pudong, Shanghai,
People's Republic of China
Post code : 201209
TEL: 021-58635678 / FAX: 021-58630003

Delta Electronics (Japan), Inc.
Tokyo Office
Delta Shibadaimon Building, 2-1-14
Shibadaimon, Minato-Ku, Tokyo, 105-0012,
Japan
TEL: 81-3-5733-1111 / FAX: 81-3-5733-1211

Delta Electronics (Korea), Inc.
234-9, Duck Soo Building 7F, Nonhyun-Dong,
Kangnam-Gu, Seoul, Korea 135-010
TEL: 82-2-515-5305 / FAX: 82-2-515-5302

Delta Electronics (Singapore) Pte. Ltd.
8 Kaki Bukit Road 2, #04-18 Ruby Warehouse Complex,
Singapore 417841
TEL: 65-6747-5155 / FAX: 65-6744-9228

Delta Power Solutions (India) Pte. Ltd.
Plot No. 28, Sector-34, EHTP
Gurgaon-122001 Haryana, India
TEL: 91-124-416-9040 / FAX: 91-124-403-6045

America
Delta Products Corporation (USA)
Raleigh Office
P.O. Box 12173,5101 Davis Drive,
Research Triangle Park, NC 27709, U.S.A.
TEL: 1-919-767-3813 / FAX: 1-919-767-3969

DELTA PRODUCTS CORPORATION BRAZIL
São Paulo Office
Rua Itapeva N° 26, 3° andar, Bela Vista
Edificio Itapeva One
CEP: 01332-000-São Paulo-SP-Brazil
TEL : 55-11-3568 3875 / Fax 55-11-3568 3865
www.delta-americas.com.br

Europe
Deltronics (The Netherlands) B.V.
Eindhoven Office
De Witbogt 15, 5652 AG Eindhoven, The Netherlands
TEL: 31-40-2592850 / FAX: 31-40-2592851

*We reserve the right to change the information in this catalogue without prior notice.

ASDA-A+_C_EN_20091006

DELTA ELECTRONICS, INC.

ASDA-A+

DELTA ASDA-A+ AC Servo System

www.delta.com.tw/industrialautomation

AC Servo System

Applications

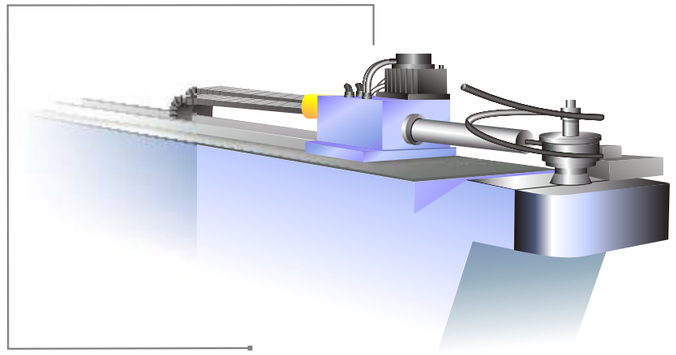

In Tube Bending Machine
In controlling the tube bending, ASDA-A+ series is able to operate stably at high-speed, conduct highly accurate positioning and extend the life of the machine.

In Bending Machine
ASDA-A+ series is able to offer accurate in-dept control and high stability, which not only reduces the low yield in the cutting but also enhances the safety and productivity. Beside, ASDA-A+ series also equals energy-saving, low power consumption and high efficiency.

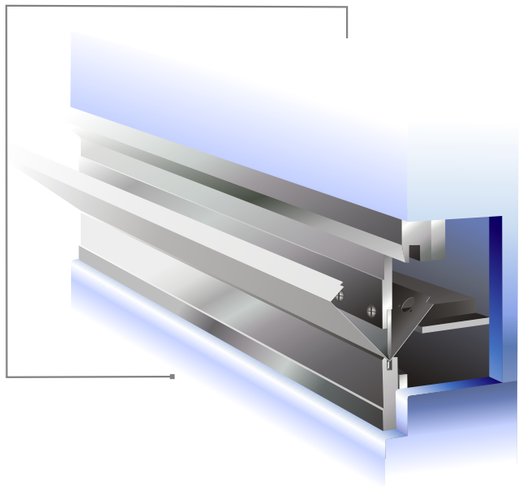

In Spring Machine
ASDA-A+ series used for driving will not be restricted by the cam of the machine but can conduct processing in different directions for achieving complicated molding. The shortened installation time can further enhance the productivity, and the high resolution is able to ensure the high accuracy.

ASDA-A+ series features encoder with 20-bit resolution (1,280,000p/rev), which perfectly offers more accurate control for the machine tool industry (e.g. the spindle in CNC machine tool, carving machine, injection molding machine, double column type machining center) requiring highly accurate processing. In addition, for equipment requiring high torque output (e.g. winding machine, tube bending machine, packaging and feeding machine), ASDA-A+ series offers high torque from 3kW to 7.5kW (19.1 N.M. ~ 47.74 N.M.).

AC Servo System

Features

Functional Characteristics

New-generation, high horsepower ASDA-A+ series not only follows the features of the existing Delta servo products, but also provides the functions which are particularly for industries requiring high torque output and high resolution.

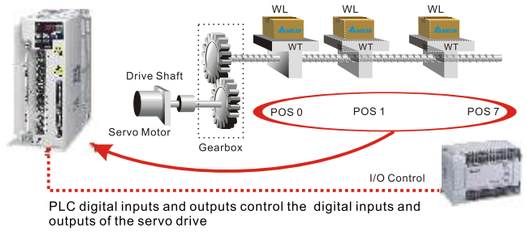

PLC digital inputs and outputs control the digital inputs and outputs of the servo drive

- Built-in Position/Speed/Torque modes.
- Easy internal single-axis position control.
- Feed step control mode (control of cutting).
  27 positions can be easily controlled and implemented through the parameter settings and by working with digital inputs/outputs and Modbus communication protocol.
- Support Modbus communication (RS-485/RS-422/RS-232)
- Provide high-speed line receiver pulse input (Max. 4MHz)
- Enhance encoder resolution to 20bit (1280000 p/rev)

Excellent Performance

- Motor settling time below 1msec
- Speed responsiveness characteristic: 550Hz
- Great stability and performance at low speed: less than 0.5% error at 1rpm per rotation

ASDA-Soft Servo Software

New version of ASDA-A-Soft servo software has a better interface and is built-in with more functions, greatly enhancing the handiness of the software and considerably shortening the time for the users to get used to ASDA-Soft.

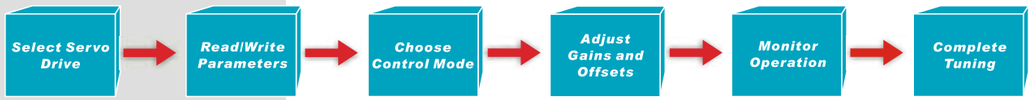

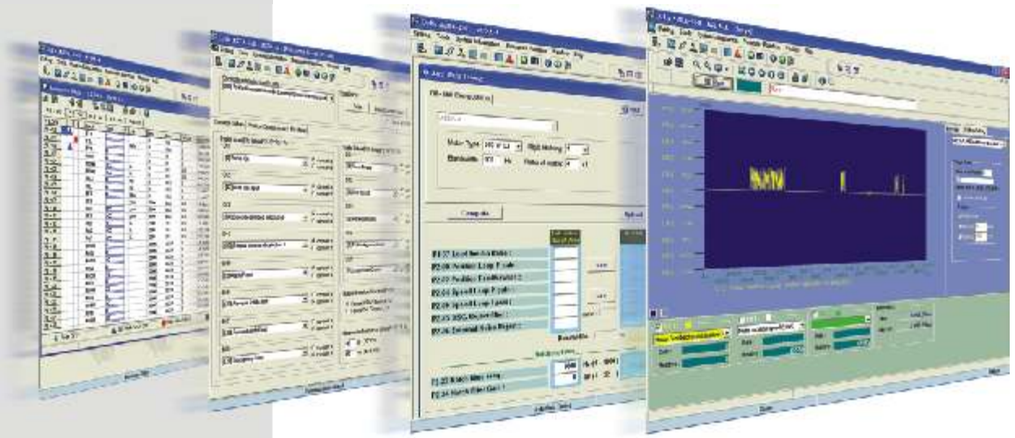

Servo Drive ASDA-A+ Series

ASD - A 45 23 - B

- Product Name
  ASD: AC Servo Drive
- Series
  A: A series
- Rated Output Power
  45: 4.5kW
  55: 5.5kW
  75: 7.5kW
- Input Voltage and Phase
  23: 220V Phase
- Encoder Resolution
  B: 20bit

Servo Motor ECMA Series

ECM A - F2 18 45 P S

- Product Name
  ECM: Electrical Commutation Motor
- Driving Type
  A: AC Servo Motor
- Series
  Rated Voltage / Rated Speed
  F: 220V / 1500rpm
  Sensor Type
  2: 20bit
- Motor Frame Size
  18: 180mm
- Rated Output Power
  30: 3kW 55: 5.5kW
  45: 4.5kW 75: 7.5kW
- Shaft Type and Oil Seal

Shaft Type and Oil Seal	No Brake No Oil Seal	With Brake No Oil Seal	No Brake With Oil Seal	With Brake With Oil Seal
Round Shaft (with screw hole)	A	B	C	D
Keyway (with screw hole)	P	Q	R	S

- Standard Shaft Dimensions: S(35mm)*1
  Specified Shaft Dimensions: 2=22mm, 3=42mm

Servo Drive		Connectable Servo Motor
Power	Model Name	
4.5kW	ASD-A4523-B	ECMA-F21830□S(3kW)*2 ECMA-F21845□S(4.5kW)
5.5kW	ASD-A5523-B	ECMA-F21855□3(5.5kW)
7.5kW	ASD-A7523-B	ECMA-F21875□3(7.5kW)

*1. For the detailed dimensions explanation, please refer to "Medium and High Inertia Servo Motor Dimensions (ECMA Series)" on page 15.
*2. The boxes(□) in the model names are for optional configurations (brake, shaft type and oil seal).

AC Servo System

System Configuration and Standard Connections

ASDA-A+

System Configuration

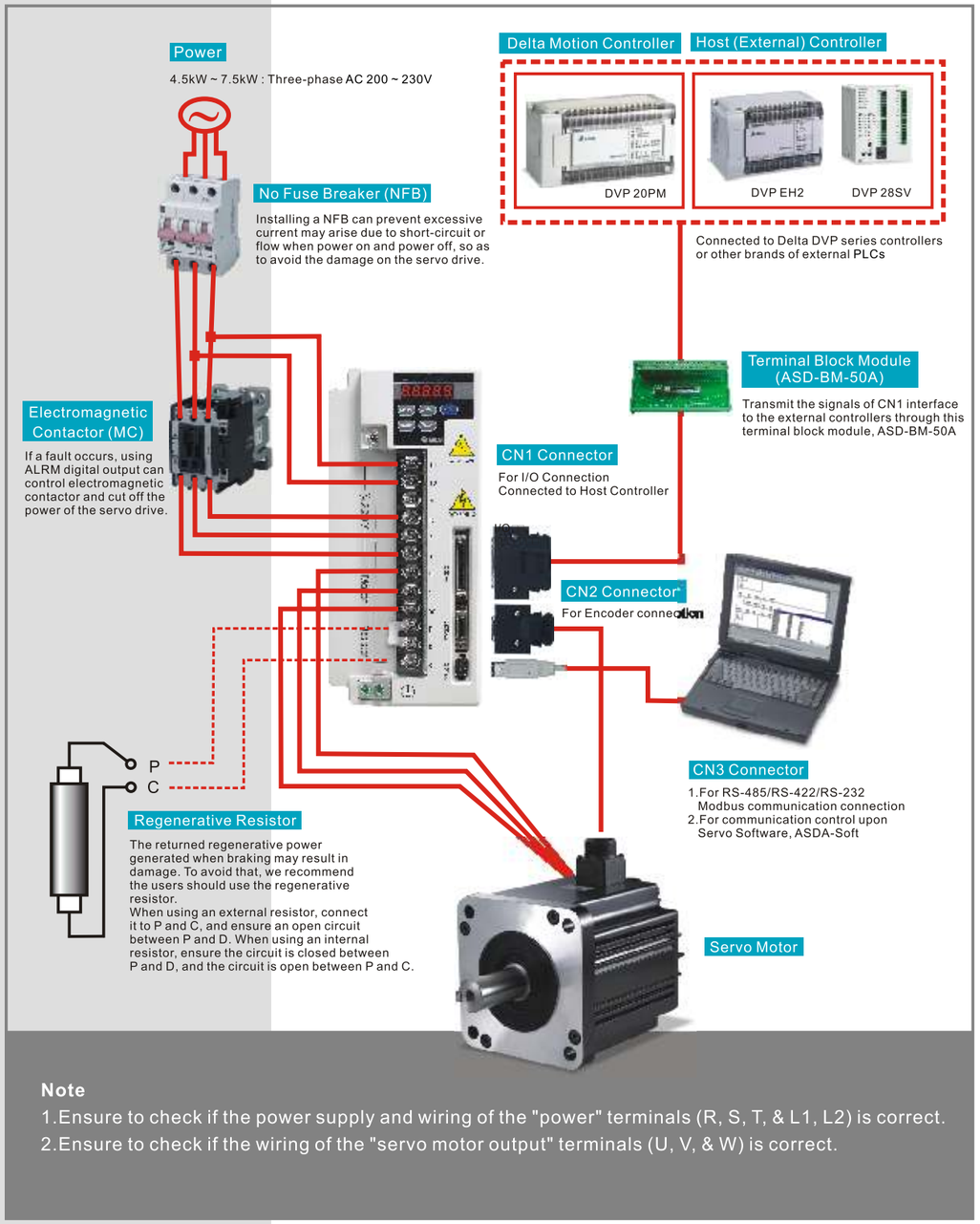

Note

1.Ensure to check if the power supply and wiring of the "power" terminals (R, S, T, & L1, L2) is correct.

2.Ensure to check if the wiring of the "servo motor output" terminals (U, V, & W) is correct.

Position (Pt) Control Mode

Pulse input, for the use of internal power supply (Open-collector input)

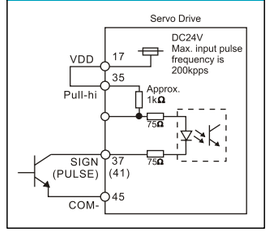

Pulse input, for the use of external power supply (Open-collector input)

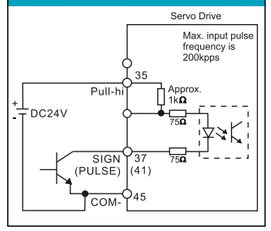

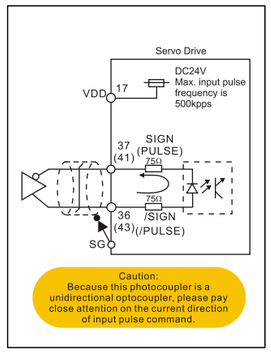

High-speed Pulse input (Line receiver)

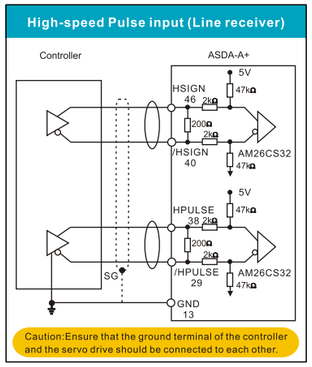

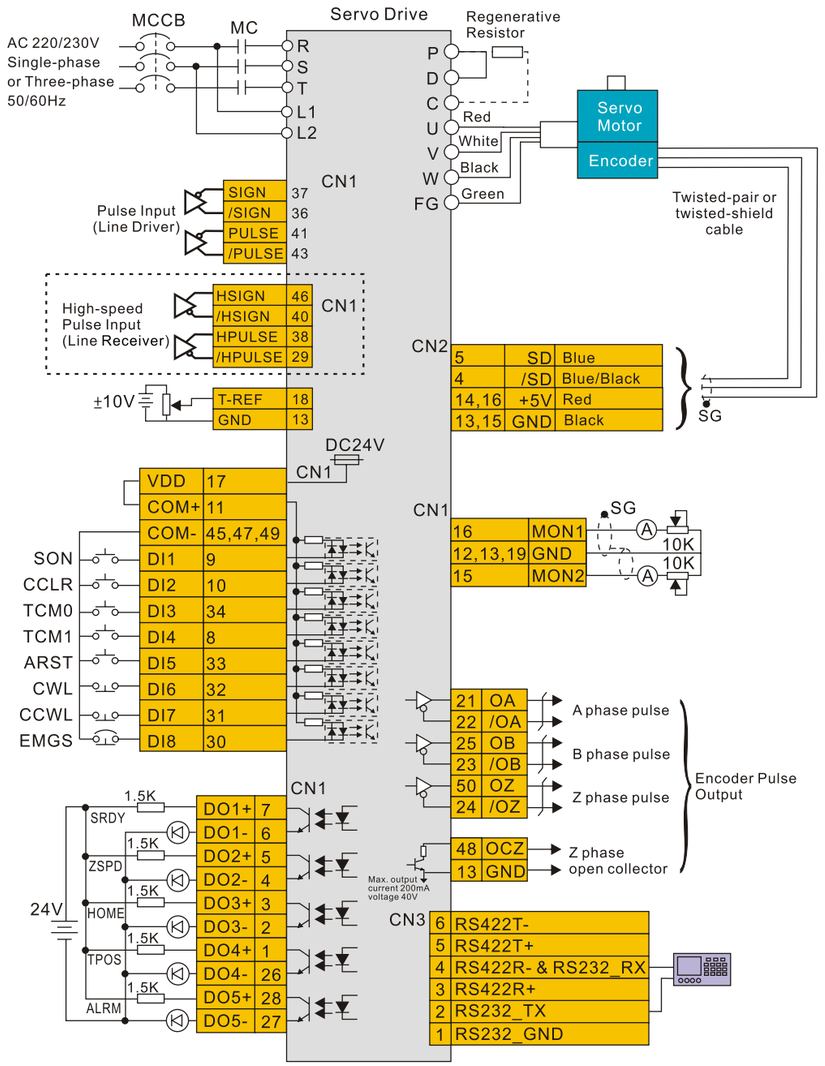

Standard Connections

Position (Pr) Control Mode

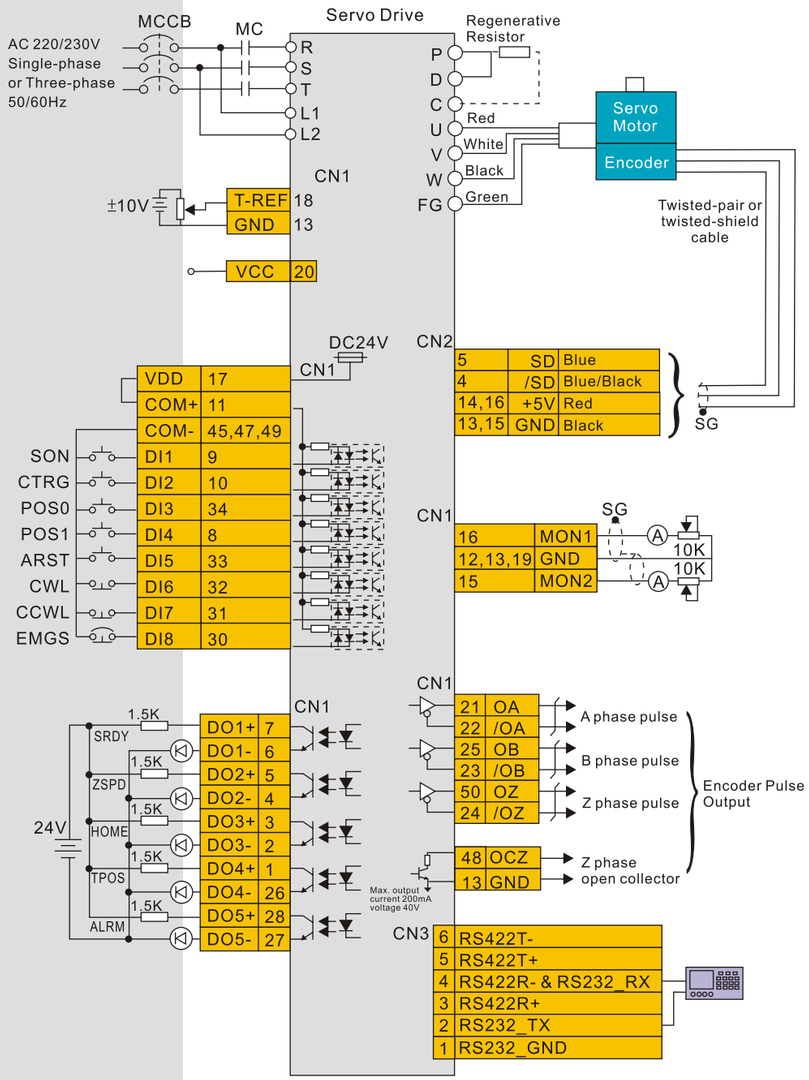

Speed (S) Control Mode

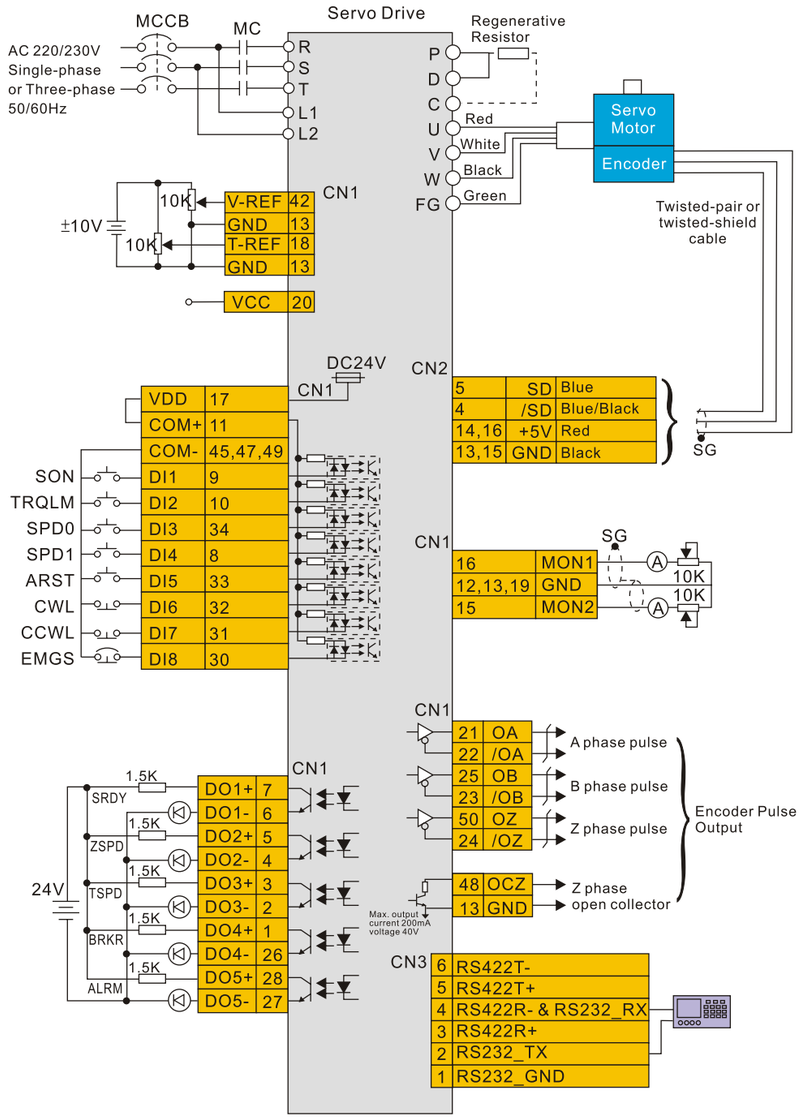

AC Servo System

Standard Connections and Specifications

Torque (T) Control Mode

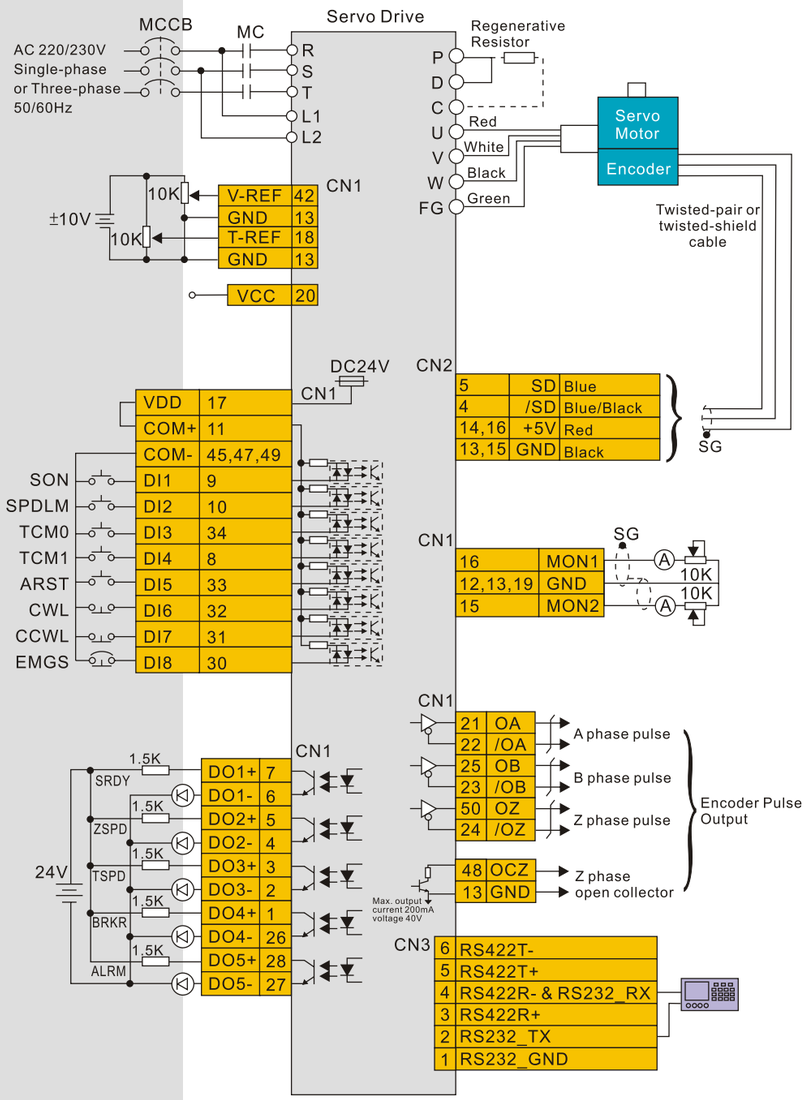

Servo Drive Specifications (ASDA-A+ Series)

			ASDA-A□□-B Series	4.5kW	5.5kW	7.5kW
				45	55	75
Power supply	Phase / Voltage			Three-phase 220VAC		
	Permissible Voltage Range			Three-phase 200~230VAC, -15%~10%		
	Permissible Frequency Range			50 / 60Hz ±5%		
Cooling System				Fan Cooling		
Encoder Resolution /Feedback Resolution				20bit (1280000 p/rev)		
Control of Main Circuit				SVPWM (Space Vector Pulse Width Modulation) Control		
Tuning Modes				Auto / Manual		
Dynamic Brake				Built-in		
Position Control Mode	Max. Input Pulse Frequency			High-speed pulse input: 4MppsMax.500Kpps(Line receiver) / Max. 200Kpps (Open collector)		
	Pulse Type			Pulse + Direction, A phase + B phase, CCW pulse + CW pulse		
	Command Source			External pulse train / Internal parameters		
	Smoothing Strategy			Low-pass and P-curve filter		
	Electronic Gear			Electronic gear N/M multiple N: 1~32767, M: 1:32767(1/50<N/M<200)		
	Torque Limit Operation			Set by parameters		
	Feed Forward Compensation			Set by parameters		
Speed Control Mode	Analog Input Command	Voltage Range		0 ~ ±10 V DC		
		Input Resistance		10K		
		Time Constant		2.2 s		
	Speed Control Range*1			1:3000		
	Command Source			External analog signal / Internal parameters		
	Smoothing Strategy			Low-pass and S-curve filter		
	Torque Limit Operation			Set by parameters or via Analog input		
	Frequency Response Characteristic			Maximum 550Hz		
	Speed Accuracy *2 (at rated rotation speed)			0.01% or less at 0 to 100% load fluctuation		
				0.01% or less at ±10% power fluctuation		
				0.01% or less at 0°C to 50°C ambient temperature fluctuation		
Torque Control Mode	Analog Input Command	Voltage Range		0~±10 V DC		
		Input Resistance		10K Ω		
		Time Constant		2.2 μs		
	Command Source			External analog signal / Internal parameters		
	Smoothing Strategy			Low-pass filter		
	Speed Limit Operation			Parameter Setting or via Analog input		
Analog Monitor Output				Monitor signal can set by parameters (Output voltage range: ±8V)		
Digital Input/Output		Input		Servo On, Reset, Gain switching, Pulse clear, Zero speed CLAMP, Speed/Torque limit enabled, Emergency stop, Forward / Reverse inhibit limit, Position / Speed mode switching, Speed / Torque mode switching, Torque / Position mode switching, Feed step selection input, Feed step mode input, Auto run input, Electronic gear ratio (Numerator) selection		
		Output		Encoder signal output (A, B, Z Line Driver / Z Open collector)		
				Servo ready, Servo On, At Zero speed, At Speed reached, At Positioning completed, At Torques limit, Servo alarm (Servo fault) activated, Electromagnetic brake control, Homing completed, Output overload warningServo warning activated, Internal position command completed		
Protective Functions				Overcurrent, Overvoltage, Undervoltage, Motor overheated, Regeneration error, Overload, Overspeed, Abnormal pulse control command, Excessive deviation, Watch dog execution time out, Encoder error, Adjustment error, Emergency stop activated, Reverse/ Forward limit switch error, Memory error, DSP communication error, Serial communication error, Input power phase loss, Serial communication time out, Command write-in error, short circuit protection of U, V, W, and Cn1, CN2, CN3 terminals		
Communication Interface				RS-232 / RS-485 / RS-422		
Environment	Installation Site			Indoor location (free from direct sunlight), no corrosive liquid and gas (far away from oil mist, flammable gas, dust)		
	Altitude			Altitude 1000m or lower above sea level		
	Atmospheric pressure			86kPa to 106kPa		
	Operating Temperature			0°C to 55°C (If operating temperature is above specified range, forced cooling will be required)		
	Storage Temperature			-20°C to 65°C (-4°C to 149□F)		
	Humidity			0 to 90% (non-condensing)		
	Vibration			9.80665m/s^2 (1G) less than 20Hz, 5.88m/ s^2 (0.6G) 20 to 50Hz		
	IP Rating			IP20		
	Power System			TN System*3		
	Approvals			IEC / EN 61800-5-1		

*1. Rated rotation speed: When full load, speed ratio is defined as the minimum speed (the motor will not pause).
*2. When command is rated rotation speed, the speed fluctuation rate is defined as: (Empty load rotation speed Full load rotation speed) / Rated rotation speed
*3. TN system: A power distribution system having one point directly earthed, the exposed conductive parts of the installation being connected to that points by protective earth conductor.

AC Servo System

Medium and High Inertia Servo Motor Specifications (ECMA Series)

Model: ECMA Series	F218			
	30	45	55	75
Rated output power (kW)	3.0	4.5	5.5	7.5
Rated torque (N-m)	19.10	28.65	35.01	47.74
Maximum torque (N-m)	57.29	71.62	87.53	119.36
Rated speed (r/min)	1500			
Maximum speed (r/min)	3000			
Rated current (A)	19.4	32.5	40.0	47.5
Maximum current (A)	58.2	81.3	100.0	118.8
Power rating (kW/s)	66.4	105.5	122.9	159.7
Rotor moment of inertia (kg.m^2)	54.95E-4	77.75E-4	99.78 E-4	142.7 E-4
Mechanical time constant (ms)	1.28	0.92	0.96	0.63
Torque constant-KT (N-m/A)	0.98	0.88	0.88	1.01
Voltage constant-KE(mV/(r/min))	35.0	32.0	31.0	35.5
Armature resistance (Ohm)	0.077	0.032	0.025	0.015
Armature inductance (mH)	1.27	0.89	0.60	0.40
Electrical time constant (ms)	16.5	27.8	24.0	26.7
Insulation class	Class B（CE）			
Insulation resistance	100MΩ , DC 500V以上			
Insulation strength	AC 1500 V, 50 Hz, 60 seconds			
Weight (kg) (without brake)	18.5	23.5	30.5	37.0
Weight (kg) (with brake)	22.5	29	36	43
Max. radial shaft load (N)	1470	1470	1764	1764
Max. thrust shaft load (N)	490	490	588	588
Power rating(kW/s) (with brake)	63.9	101.8	119.4	156.6
Rotor moment of inertia(kg.m^2)(with brake)	57.06E-4	80.65E-4	102.70E-4	145.55E-4
Mechanical time constant(ms)(with brake)	1.33	0.96	0.99	0.64
Brake holding torque[Nt-m(min)]	25			
Brake power consumption (at 20°C) [W]	20.4			
Brake release time [ms (Max)]	10			
Brake pull-ine time [ms (Max)]	70			
Vibration grade (μm)	15			
Operating temperature (°C)	0~40			
Storage temperature(°C)	-10~80			
Operating humidity	20~90%RH (non-condensing)			
Storage humidity	20~90%RH (non-condensing)			
Vibration capacity	2.5G			
IP rating	(IP65 (when both waterproof connectors and shaft seal installation (or selecting oil seal models, an oil seal is used to be fitted to the rotating shaft, making the connectors waterproof (IP65 applicable)) are used.)			
Approvals	IEC60034-1 CE Mark Safety Approved c UL us			

Medium and High Inertial Servo Motor Speed-Torque Curves

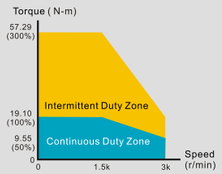

ECMA-F21830□□

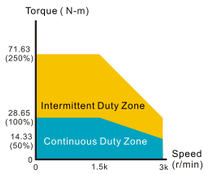

ECMA-F21845□□

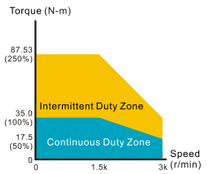

ECMA-F21855□□

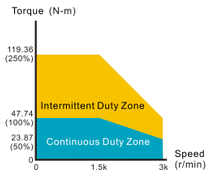

ECMA-F21875□□

Power Connector

ASD-CAPW2000
(for models of 4.5kW and below)
CLAMP : MS3057-16A

ASD-CAPW4000
(for models of 5.5kW and below)
CLAMP : WPS3057-20A

ASD-CNBR1000
(for models of 5.5kW and below)
CLAMP : WPS3106A-4S-R

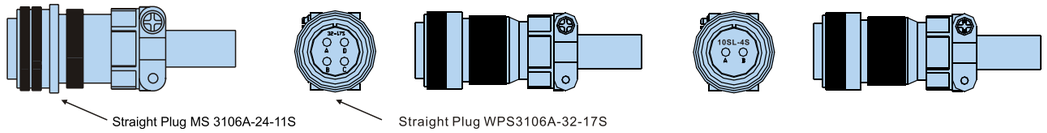

Power Cable

ASD-CAPW2203 / 2205(for 3kW servo motor)

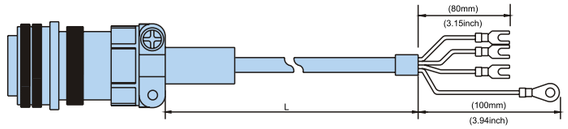

Item	Part No.	Straight	L	
			mm	inc
1	ASD-CAPW2203	MS 3106A-24-11S	3000 ± 100	118 ± 4
2	ASD-CAPW2205	MS 3106A-24-11S	5000 ± 100	197 ± 4

ASD-CAPW2303 / 2305(cable for motors with brake)
(for models of 3kW and below)

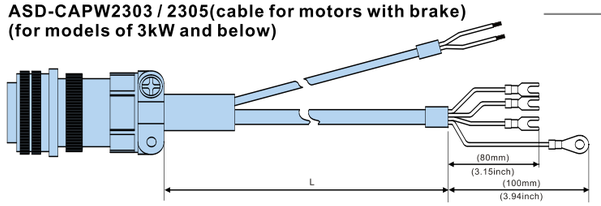

Item	Part No.	Straight	L	
			mm	inc
1	ASD-CAPW2303	MS 3106A-24-11S	3000 ± 100	118 ± 4
2	ASD-CAPW2305	MS 3106A-24-11S	5000 ± 100	197 ± 4

ASD-CAPW3203/3205(for 4.5kW model)

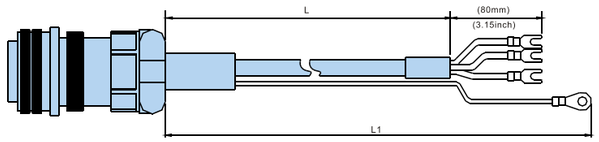

Item	Part No.	Straight	L	
			mm	inc
1	ASD-CAPW3203	MS 3106-24-11S	3000 ± 100	118 ± 4
2	ASD-CAPW3205	MS 3106-24-11S	5000 ± 100	197 ± 4

ASD-CAPW3303 / 3305(cable for motors with brake) (for 4.5kW model)

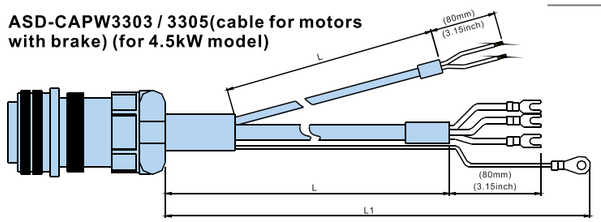

Item	Part No.	Straight	L		L1	
			mm	inc	mm	inc
1	ASD-CAPW3303	MS 3106A-24-11S	3000 ± 100	118 ± 0.4	3100 ± 100	122 ± 0.4
2	ASD-CAPW3305	MS 3106A-24-11S	5000 ± 100	197 ± 0.4	5100 ± 100	201 ± 0.4

Encoder Connector

ASD-CAEN1000

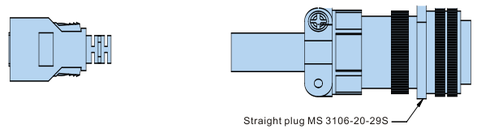

Accessories

Encoder Cable

ASD-CAEN1003 / 1005

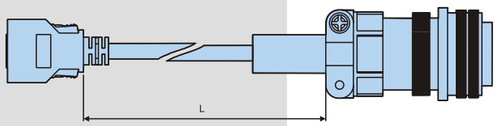

Item	Part No.	Straight	L	
			mm	inc
1	ASD-CAEN1003	MS 3106-20-29S	3000 ± 100	118 ± 4
2	ASD-CAEN1005	MS 3106-20-29S	5000 ± 100	197 ± 4

I/O Signal Connector

ASD-CNSC0050

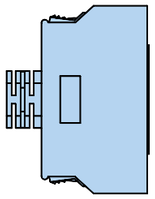

Vendor Name	Vendor P/N
3M TAIWAN LTD	10150-3000PE
3M TAIWAN LTD	10350-52A0-008

Communication Cable(for PC)

ASD-CARS0003

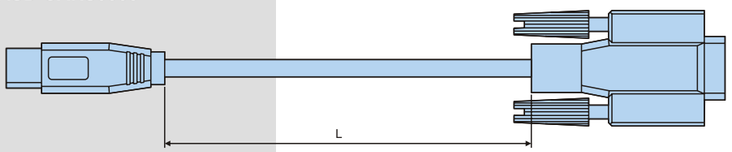

Item	Part No.	L	
		mm	inc
1	ASD-CARS0003	3000 ± 100	118 ± 4

Terminal Block

ASD-BM-50A

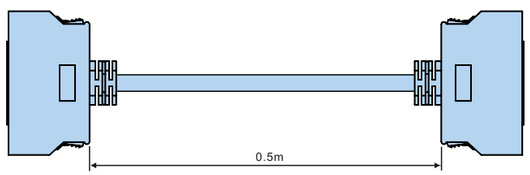

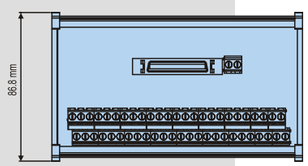

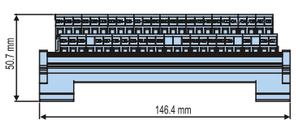

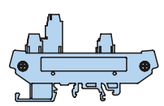

4.5kW Servo Drive and 3.5kW Medium Inertia Servo Motor

Servo Drive	ASD-A4523-B			
Servo Motor	ECMA-F21830□S			
Cable	Without Brake		With Brake	
	3M	5M	3M	5M
	Motor Power Cable ASD-CAPW2203	Motor Power Cable ASD-CAPW2205	Motor Power Cable ASD-CAPW2303	Motor Power Cable ASD-CAPW2305
	Encoder Cable ASD-CAEN1003	Encoder Cable ASD-CAEN1005	Encoder Cable ASD-CAEN1003	Encoder Cable ASD-CAEN1005
Connector	Power Connector ASD-CAPW2000			
	Encoder Connector ASD-CAEN1000			

4.5kW Servo Drive and 4.5kW Medium-High Inertia Servo Motor

Servo Drive	ASD-A4523-B			
Servo Motor	ECMA-F21845□S			
Cable	Without Brake		With Brake	
	3M	5M	3M	5M
	Motor Power Cable ASD-CAPW3203	Motor Power Cable ASD-CAPW3205	Motor Power Cable ASD-CAPW3303	Motor Power Cable ASD-CAPW3305
	Encoder Cable ASD-CAEN1003	Encoder Cable ASD-CAEN1005	Encoder Cable ASD-CAEN1003	Encoder Cable ASD-CAEN1005
Connector	Power Connector ASD-CAPW2000			
	Encoder Connector ASD-CAEN1000			

5.5kW Servo Drive and 5.5kW Medium-High Inertia Servo Motor

Servo Drive	ASD-A5523-B	
Servo Motor	ECMA-F21855□3	
Cable	Encoder Cable ASD-CAEN1003	Encoder Cable ASD-CAEN1005
Connector	Power Connector ASD-CAPW4000	
	Encoder Connector ASD-CAEN1000	
	Brake Connector ASD-CNBR1000	

7.5kW Servo Drive and 7.5kW Medium-High Inertia Servo Motor

Servo Drive	ASD-A7523-B	
Servo Motor	ECMA-F21875□3	
Cable	Encoder Cable ASD-CAEN1003	Encoder Cable ASD-CAEN1005
Connector	Power Connector ASD-CAPW4000	
	Encoder Connector ASD-CAEN1000	
	Brake Connector ASD-CNBR1000	

Regenerative Resistor Specifications

Servo Drive (kW)	Recommended Specifications for Built-in Regenerative Resistor		Recommended Specifications for External Regenerative Resistor	Min. Allowable Resistance (Ohm)
	Resistance (P1-52)	Capacity (P1-53)		
4.5kW	20 Ω	100W	12 Ω 4.5KW	10 Ω
5.5kW	-	-	8 Ω 5.5KW	8 Ω
7.5kW	-	-	8 Ω 7.5KW	8 Ω

Note : 1. When the fault, ALE05 (Regeneration Error) occurs, please increase the regenerative resistor capacity.
2. When combining multiple small-capacity regenerative resistors in parallel to increase the regenerative resistor capacity, make sure that the total resistance value of the regenerative resistors should be lower than the minimum allowable resistance listed in the above table.

Dimensions

Medium Inertia Servo Motor Dimensions (ECMA Series)

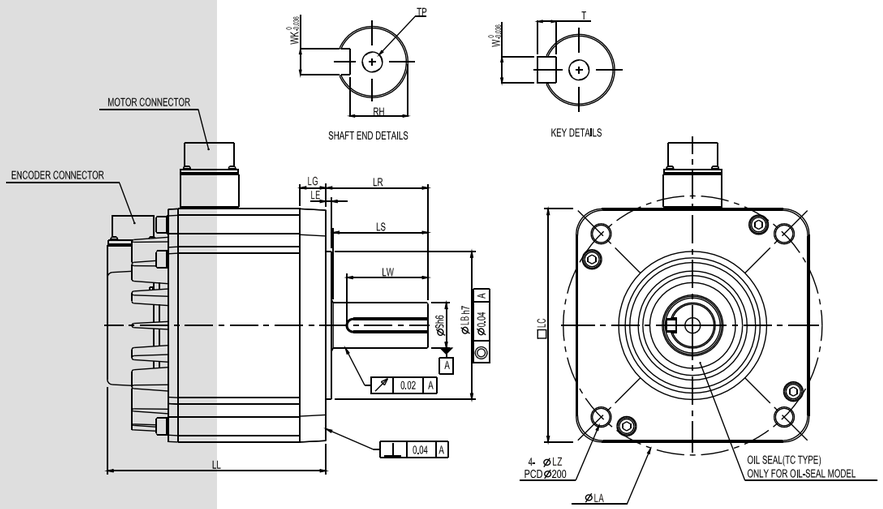

	ECMA-F21830□S	ECMA-F21845□S
LC	180	180
LZ	13.5	13.5
LA	200	200
S	35	35
LB	114.3	114.3
LL	202.1	235.3
LR	79	79
LE	4	4
LG	20	20
LS	108.5	108.5
LW	63	63
RH	30	30
WK	10	10
W	10	10
T	8	8
TP	M12, Depth25	M12, Depth25

NOTE
1) Dimensions are in millimeters ; Weights are in kilograms (kg) and (pounds (lbs)).
2) Dimensions and weights of the servo motors may be revised without prior notice.
3) The boxes (□) in the model names are for optional configurations (brake, shaft type and oil seal).

Medium and High Inertia Servo Motor Dimensions (ECMA Series)

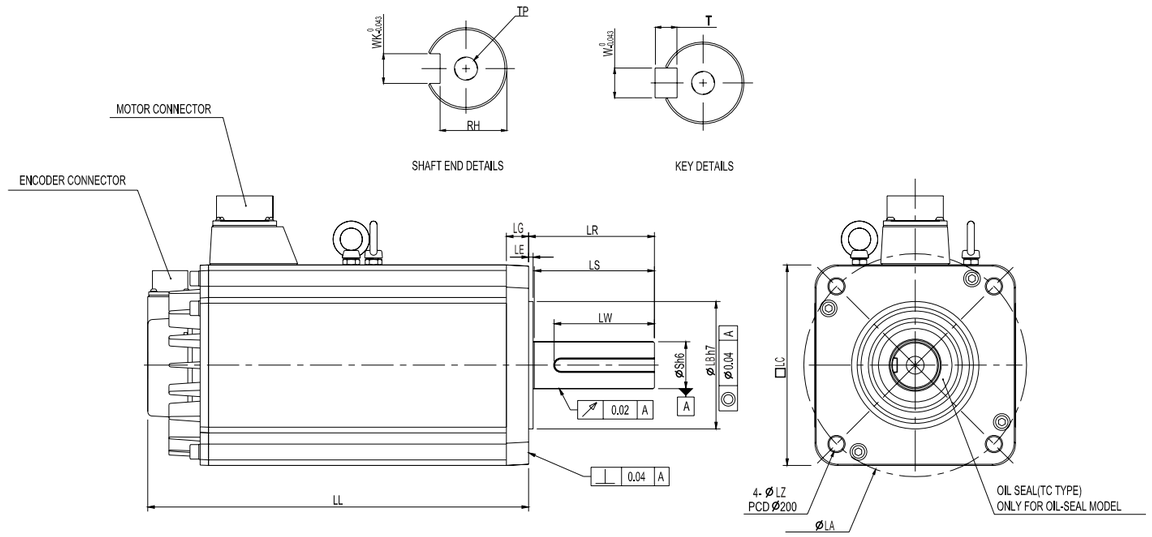

	ECMA-F21855□S	ECMA-F21875□S
LC	180	180
LZ	13.5	13.5
LA	200	200
S	42	42
LB	114.3	114.3
LL	279.7	342.0
LR	113	113
LE	4	4
LG	20	20
LS	73	73
LW	90	90
RH	37	37
WK	12	12
W	12	12
T	8	8
TP	M16, Depth32	M16, Depth32

NOTE
1) Dimensions are in millimeters ; Weights are in kilograms (kg) and (pounds (lbs)).
2) Dimensions and weights of the servo motors may be revised without prior notice.
3) The boxes (□) in the model names are for optional configurations (brake, shaft type and oil seal).

Dimensions

Servo Drive Dimension (ASDA-A+ Series) ASD-A4523-B (4.5kW)

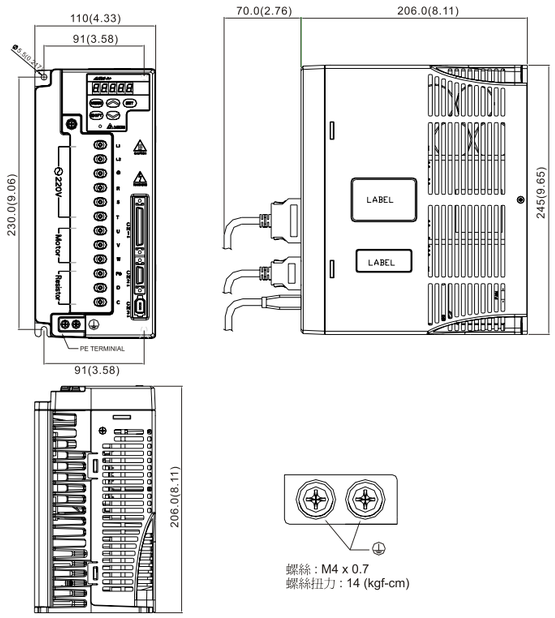

Weight
3.0 (6.6)

NOTE
1) Dimensions are in millimeters (inches) ; Weights are in kilograms (kg) and (pounds (lbs)).
2) Dimensions and weights of the servo drives may be revised without prior notice.

Servo Drive Dimension (ASDA-A+ Series) ASD-A5523-B (5.5kW)

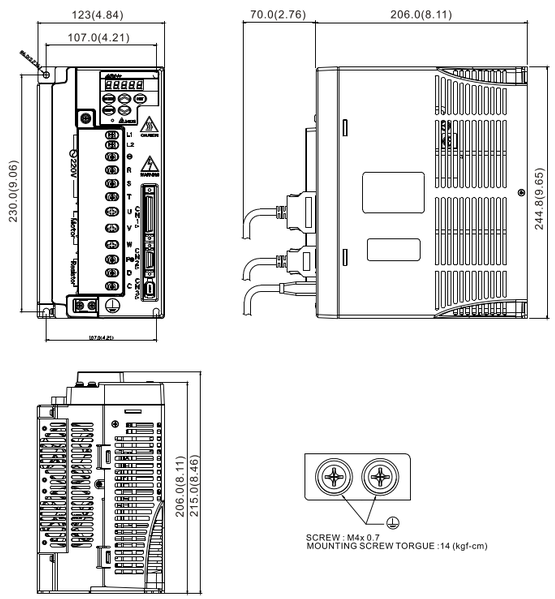

Weight
5.5 (12)

NOTE
1) Dimensions are in millimeters ; Weights are in kilograms (kg) and (pounds (lbs)).
2) Dimensions and weights of the servo drives may be revised without prior notice.

Servo Drive Dimension (ASDA-A+ Series) ASD-A7523-B (7.5kW)

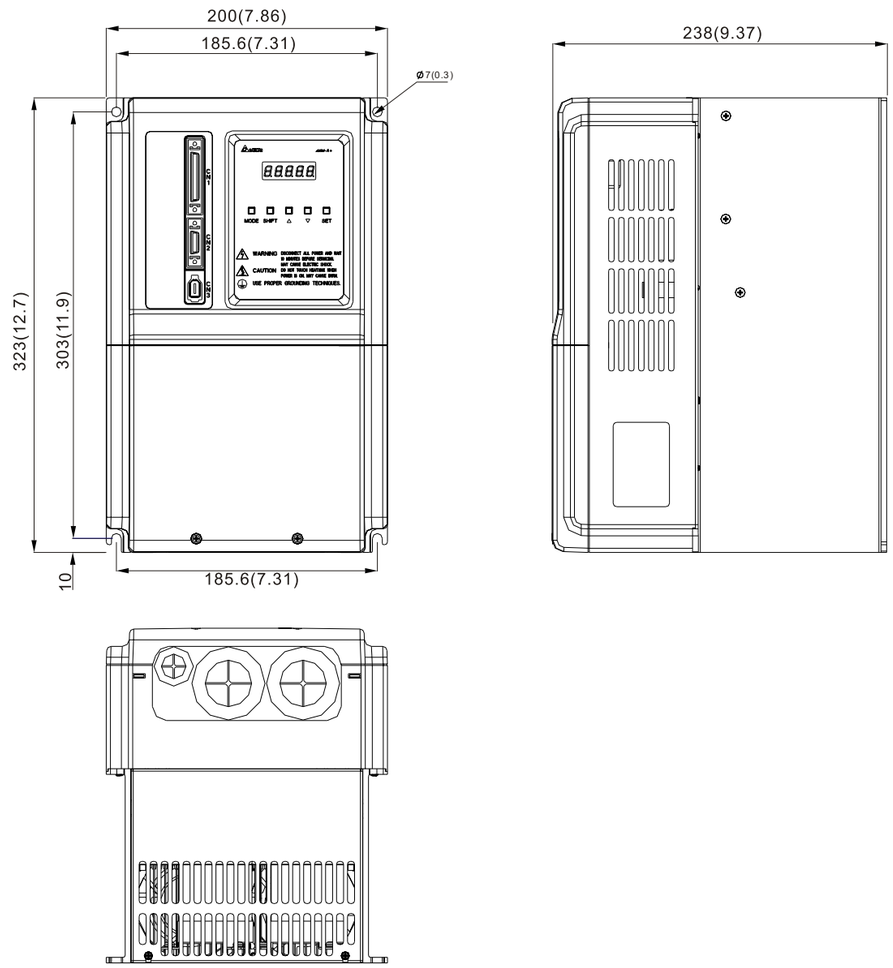

Weight
8 (17.6)

NOTE
1) Dimensions are in millimeters ; Weights are in kilograms (kg) and (pounds (lbs)).
2) Dimensions and weights of the servo drives may be revised without prior notice.